Wall reader (bus) DoorLock-WA7-V2 – MANUAL

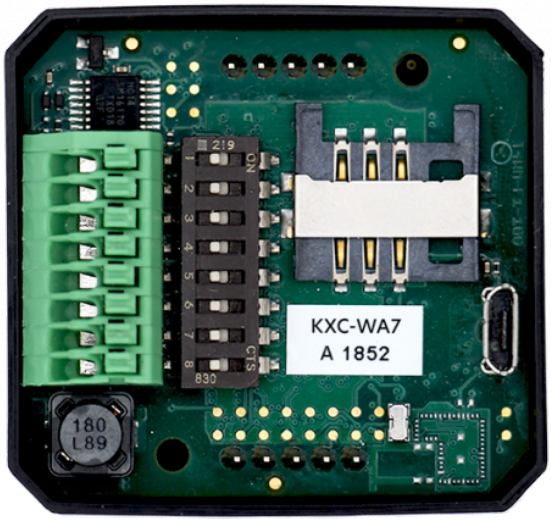

ORDER-CODES:
KXC-WA7-IP1-V2, KXC-WA7-IP2-V2

Datasheet KXC-WA7-IPx-V2

Overview

Kentix IP wall readers enable contactless control of doors with a MIFARE® DESFire® RFID chip. The wall reader is suitable for installation in intercom systems or behind front panels. The reader's electronics are housed in a 23 mm high casing. The setup always consists of the actual wall reader and the connected Kentix AccessManager. The wall reader is connected to the AccessManager via a 4-wire connection. The AccessManager itself connects directly to a Power over Ethernet (PoE) capable network switch. To control electric strikes/motor locks, the SmartRelay offers two relay outputs and, depending on the power class of the strikes, an integrated PoE splitter with 24VDC output.

For the operation of the wall readers (version: V2), a Kentix AccessManager for cable

© Kentix GmbH. This file was automatically generated on 2026-11-24 12:15:24. Please visit docs.kentix.com for the latest documentation.

readers (KXP-2-RS) with a KentixONE software version of 8.2.0 or higher is required. Information about the relay and **circuit diagrams including examples** can be found here: AccessManager (Bus)

Safety instructions

Installation
Installation and commissioning may only be carried out by trained specialist personnel in accordance with the instructions.
No modifications of any kind may be made to Kentix GmbH products, with the exception of those described in the relevant instructions.
When installing Kentix devices, certain degrees of protection must be guaranteed.
Observe the relevant regulations for installations in the respective environment.
Only operate the products within the defined temperature range.
The instructions should be passed on to the user by the person carrying out the installation.
Kentix accepts no liability for damage to the devices or components caused by incorrect installation. Kentix accepts no liability for incorrectly programmed units.
Kentix accepts no liability for faults, material damage or other damage.
Use of the products, transport and storage
Protect the device from
moisture, dirt and damage during transportation, storage and operation.
Battery powered products
Do not use the products in potentially explosive atmospheres.
Only operate the products within the defined temperature range.
Installation and battery replacement may only be carried out by trained specialist personnel in accordance with the instructions.
Do not charge, short-circuit, open or heat batteries.
Observe the correct polarity when inserting the batteries.
The devices must always be operated with the batteries intended for the product.
When changing the batteries, always replace all batteries.
Dispose of old or used batteries properly.
Keep batteries out of the reach of children.
Maintenance
Kentix devices must be checked for functionality as part of annual maintenance.
Disposal
Electrical appliances and batteries must be disposed of separately from household waste.

Controls

© Kentix GmbH. This file was automatically generated on 2026-11-24 12:15:24. Please visit docs.kentix.com for the latest documentation.

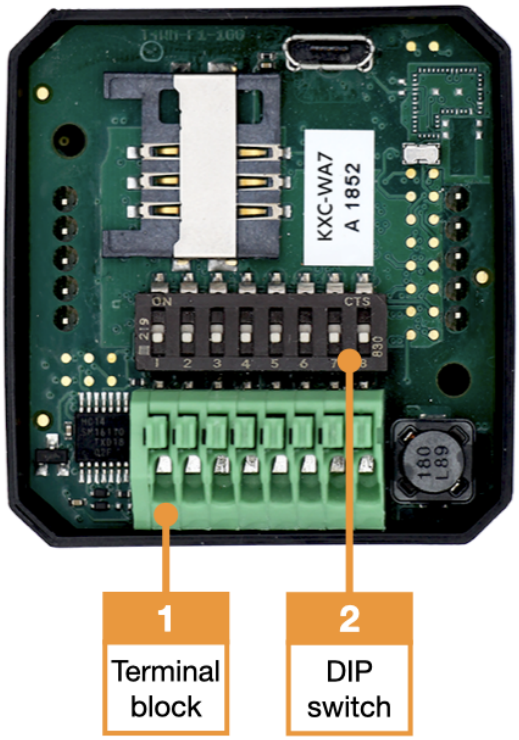

1. Connection terminal
2. DIP switch

Connection terminal

Terminal # Reader	Function Reader	Terminal # AccessManager
1	–	–
2	–	–
3	RS-485 A	6 (BUS A)
4	RS-485 B	5 (BUS B)
5	–	–
6	–	–
7	12 – 30 VDC (+)	3 (+)

© Kentix GmbH. This file was automatically generated on 2026-11-24 12:15:24. Please visit docs.kentix.com for the latest documentation.

Terminal # Reader	Function Reader	Terminal # AccessManager
8	GND (-)	4 (-)

KXC-WA7-IPx-V2 Connection terminal

DIP switch

DIP	Function	Standard settings
1	–	–
2	–	–
3	–	–
4	–	–
5	RS-485 BIAS ON/OFF	OFF
6	–	–
7	–	–
8	Termination 120 Ohm (terminating resistor)	OFF

KXC-WA7-IPx-V2 DIP switch

Important! Wall readers of different versions (V1, V2) cannot be operated on one AccessManager. The version identifier (e.g. V2) is coded in the article number.
For the operation of the wall readers with version 2 (V2), the connected AccessManagers requires at least the KentixONE version 8.2.0

Dimensions

© Kentix GmbH. This file was automatically generated on 2026-11-24 12:15:24. Please visit docs.kentix.com for the latest documentation.

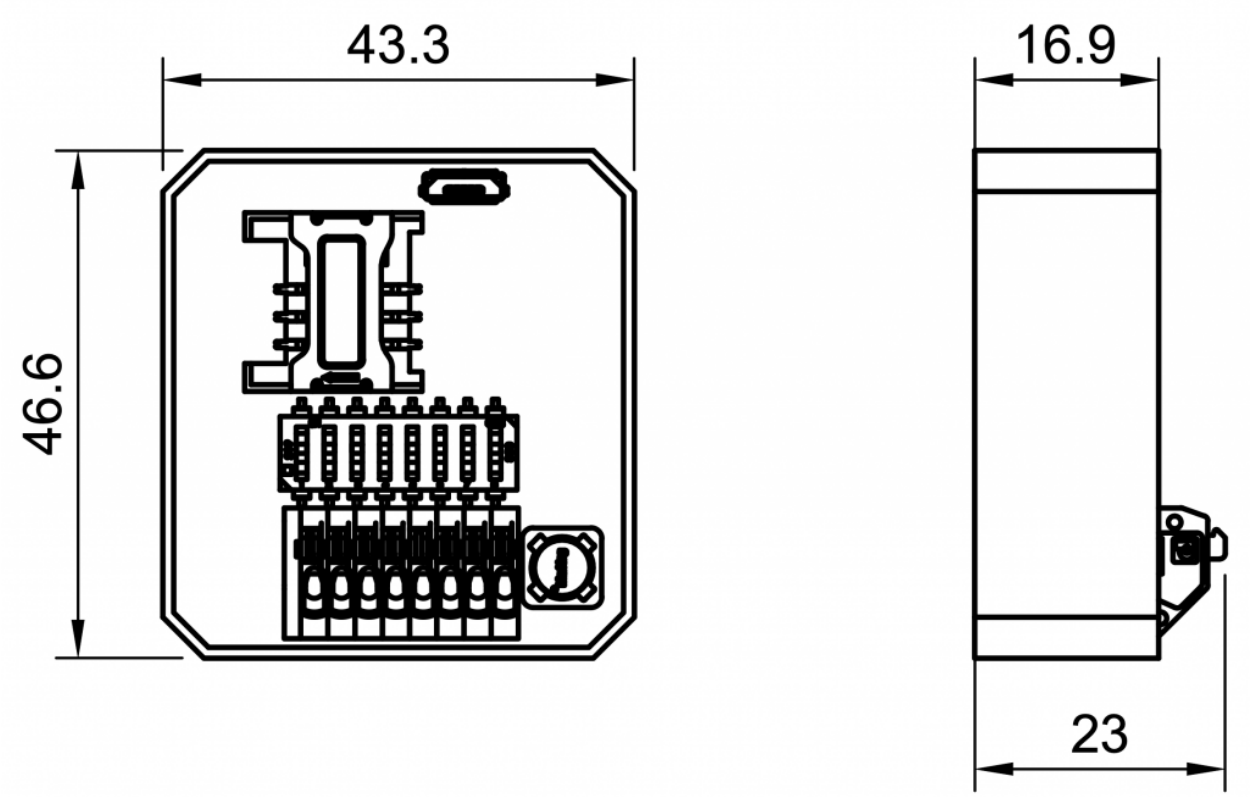

Connection example

© Kentix GmbH. This file was automatically generated on 2026-11-24 12:15:24. Please visit docs.kentix.com for the latest documentation.

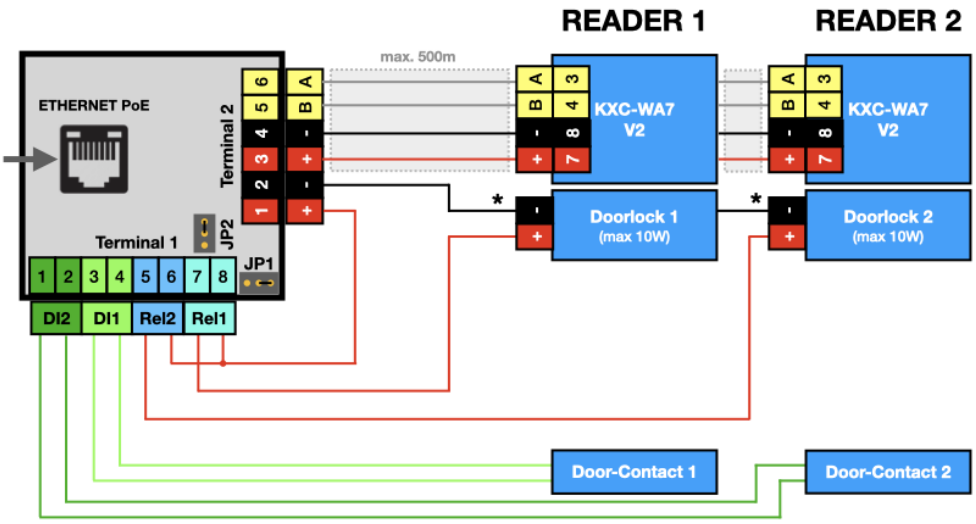

The connection example schematically shows the wiring of two DoorLock-WA7 with door contacts and external electric strikes to an AccessManager.

Terminal 2 on the AccessManager provides communication via the data bus and the supply of operating voltage for the wall readers. (terminals 3-6). Terminal 2 serves as a common potential for the power supply of door openers with the PoE supply voltage of the AccessManager.

Terminal 1 is used for connection of potential-free contacts (“door contacts”, terminals 1-4) and switching of door openers by relay 2 (5-6) and relay 1 (7-8). Relay 1 and 2 switch terminal 1 to terminal 2 to common potential (terminal2, terminal 2).

Commissioning two wall readers on one AccessManager
If two wall readers are to be operated with one AccessManager, proceed as follows for commissioning:
Connect the first wall reader to the AccessManager. Add it in the main device with “DoorLock (IP)”. Once the first WallReader has been successfully added, disconnect it temporarily from the AccessManager to connect the second WallReader and add it as well. Once both devices have been successfully registered, reconnect the first WallReader to the

© Kentix GmbH. This file was automatically generated on 2026-11-24 12:15:24. Please visit docs.kentix.com for the latest documentation.

AccessManager and then put both devices into operation together.

Installation example

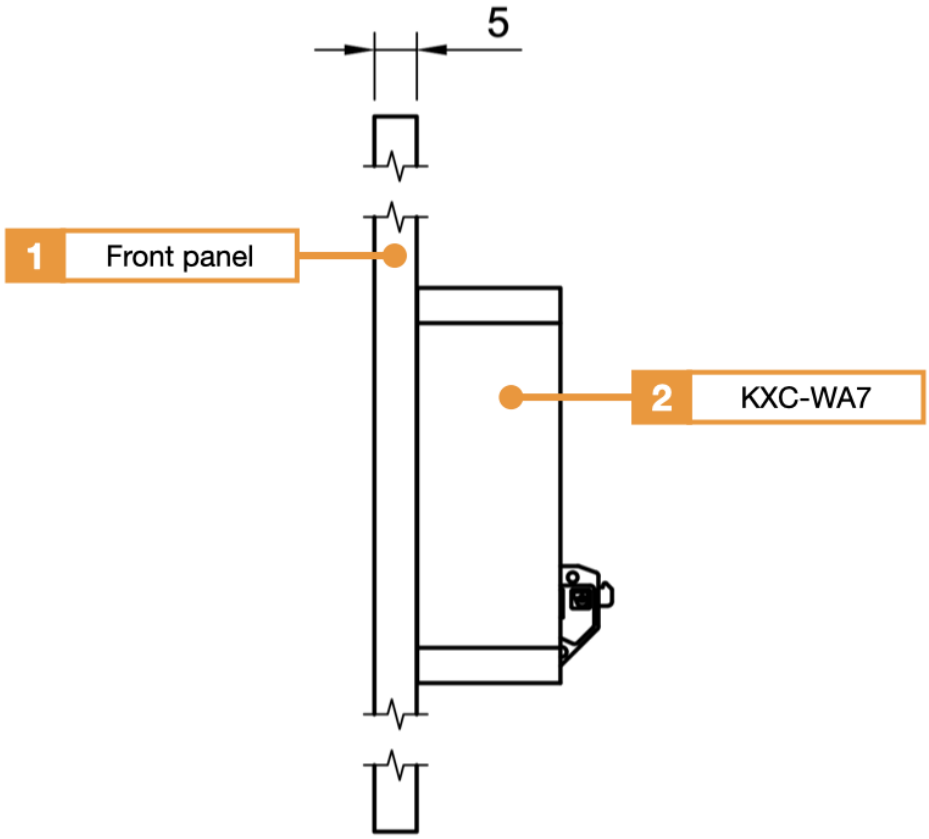

1. Front panel (maximum thickness 5mm)
2. DoorLock-WA7

The DoorLock-WA7 can be mounted in intercom systems or behind front panels using the adhesive pads supplied. The reading range of the DoorLock depends on the material of the front panel and other environmental influences. The material thickness of the front panel must not exceed 5 mm.

Signaling

Function	Signal and explanation
Wall reader is offline	LED flashes magenta

© Kentix GmbH. This file was automatically generated on 2026-11-24 12:15:24. Please visit docs.kentix.com for the latest documentation.

Access granted	short tone, LED flashes green
Door is opened by time profiles	LED lights up permanently green
Access denied	short tone, LED flashes red
Zone is armed	3 long tones, simultaneously LED flashes 3x red
Arming not possible	long tone, LED flashes red

Table signaling

© Kentix GmbH. This file was automatically generated on 2026-11-24 12:15:24. Please visit docs.kentix.com for the latest documentation.