Wall reader (radio) DoorLock-WA1 – MANUAL

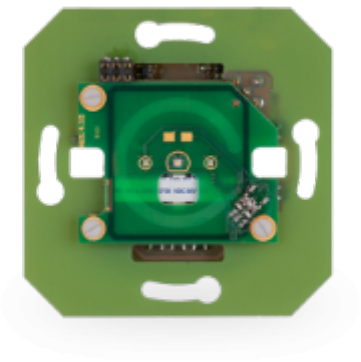

ORDER-CODES:
KXC-WA1

DATASHEET KXC-WA1

Overview

The radio wall reader expands the application range of Kentix Smart Access to include other fields of application such as factory gates, doors with motor control or barriers. It fully integrates with the Smart Access series with radio knob and radio lever handle. Integration, configuration and operation are analogous to the components listed above. Here, too, online or offline operation is possible. The wall reader already has its own relay, in online mode this can control one of 2 relays in the respective AccessPoint.

Safety instructions

Installation
Installation and commissioning may only be carried out by trained specialist personnel in accordance with the instructions.
No modifications of any kind, other than those described in an appropriate manual, are permitted to Kentix GmbH products.
Certain levels of protection must be provided when installing Kentix equipment.
Observe the relevant regulations for installations in the respective environment.
Only operate the products within the defined temperature range.
The instructions should be passed on to the user by the person carrying out the installation.
Kentix accepts no liability for damage to the equipment or components resulting from incorrect installation. No liability is accepted for incorrectly programmed units.

© Kentix GmbH. This file was automatically generated on 2026-02-04 20:58:11. Please visit docs.kentix.com for the latest documentation.

Kentix shall not be liable in the event of malfunctions, damage to property or other damage.
Use of the products, transport and storage
Protect the device during transport, storage and operation from
Protect moisture, dirt and damage.
Battery powered products
Do not use products in potentially explosive atmospheres.
Only operate the products within the defined temperature range.
Installation and battery replacement may only be carried out by trained personnel in accordance with the instructions.
Do not charge, short circuit, open or heat batteries.
When inserting the batteries, pay attention to the correct polarity.
The devices must always be operated with the batteries intended for the product.
When changing batteries, always replace all batteries.
Dispose of old or used batteries properly.
Keep batteries out of the reach of children.
Maintenance
Kentix devices must be checked for functionality as part of annual maintenance.
Disposal
Electrical appliances and batteries must be disposed of separately from household waste.

Commissioning

The voltage supply and relay switching is done directly at the wall reader. Please refer to the following circuit diagram for the PIN assignment.

© Kentix GmbH. This file was automatically generated on 2026-02-04 20:58:11. Please visit docs.kentix.com for the latest documentation.

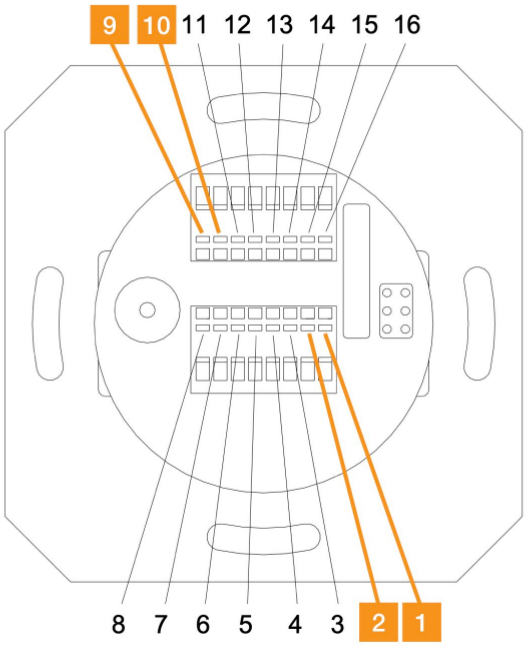

Connection terminal rear side

1	Power supply 8-30 VDC (polarity arbitrary)
2	Power supply 8-30 VDC (polarity arbitrary)
9	Switching relay output (normally open contact) max. 30 V AC/DC, max. 1.5A (any polarity)
10	Switching relay output (normally open contact) max. 30 V AC/DC, max. 1.5A (any polarity)

WA1 Connection terminals table

Control of the door opener

There are two variants for controlling the door opener or motor lock with the following differences and limitations.

Control of the door opener directly via the relay output of the wall reader

© Kentix GmbH. This file was automatically generated on 2026-02-04 20:58:11. Please visit docs.kentix.com for the latest documentation.

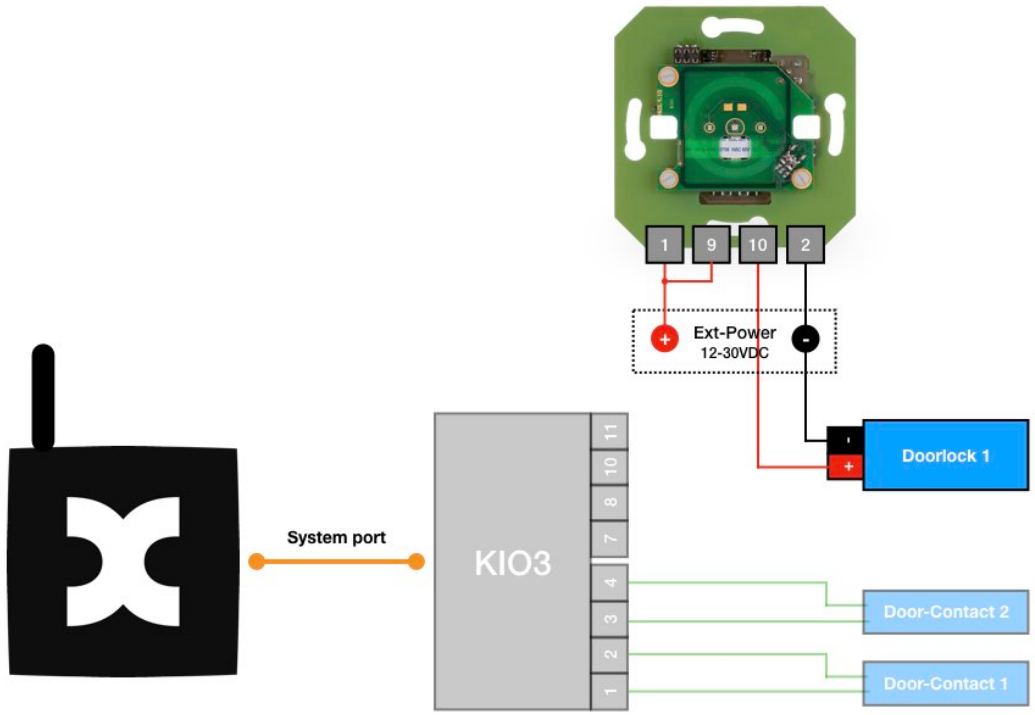

- Connection is made directly to the wall reader and is therefore easier to manipulate. Suitable for indoor areas or climb-over gates without high safety requirements.
- The relay contact (9,10) on the wall reader is a normally open contact.
- The KIO3 module shown in the circuit diagram is optional and is only required to query the door contacts. If these are not required, the module is omitted.
- **RESTRICTION**: No remote opening via smartphone app or software possible, as the radio wall reader only establishes a radio connection to the AccessManager based on a read event of the RFID card.

Control of the door via an AccessManager with a KIO3 IO module connected to the system socket.

© Kentix GmbH. This file was automatically generated on 2026-02-04 20:58:11. Please visit docs.kentix.com for the latest documentation.

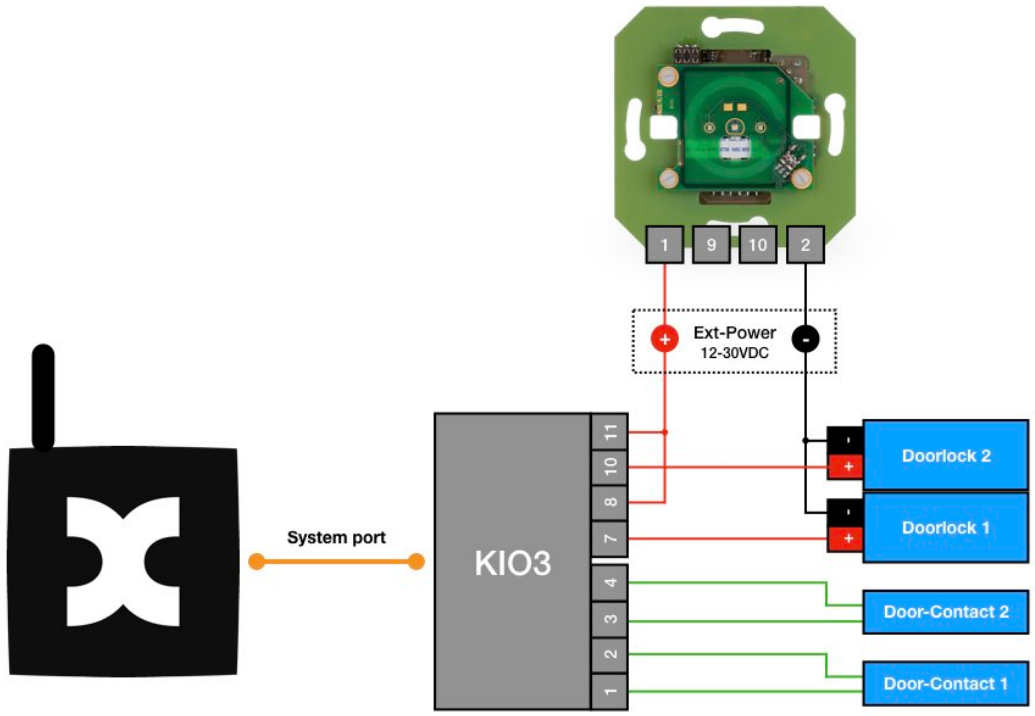

- The door opener is connected to the KIO3 module indoors, where safe control is possible.
- The relay contact on the KIO3 IO module is a changeover contact, wired as a make contact in the example.
- **RESTRICTION:** Only 2 relay outputs possible via IO module (KIO3) per AccessManager. Relay, however, can be remotely controlled or opened via time programs at any time.

Installation of the wall reader

To install a Kentix radio converter reader, please proceed as follows

Installation in the flush-mounted box

Guide the wall reader to the flush-mounted box. Make sure that no cable is pinched or crushed.

© Kentix GmbH. This file was automatically generated on 2026-02-04 20:58:11. Please visit docs.kentix.com for the latest documentation.

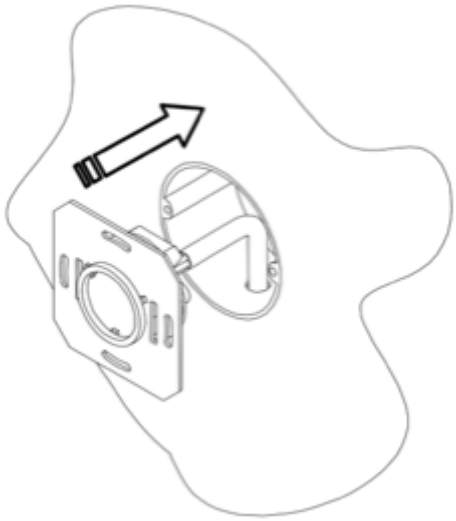

Fix wall reader

Then align the wall reader in the flush-mounted box and screw it tight.

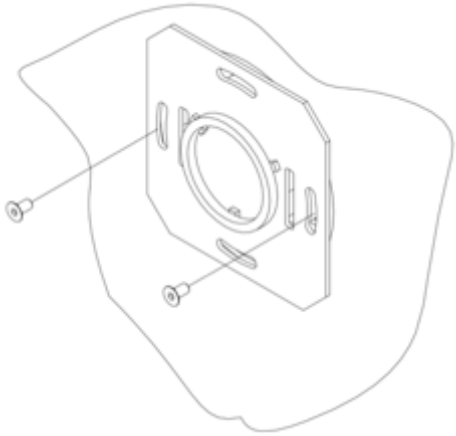

Fasten cover

Attach the cover to the wall reader. Note that this must be additionally screwed depending on the design.

© Kentix GmbH. This file was automatically generated on 2026-02-04 20:58:11. Please visit docs.kentix.com for the latest documentation.

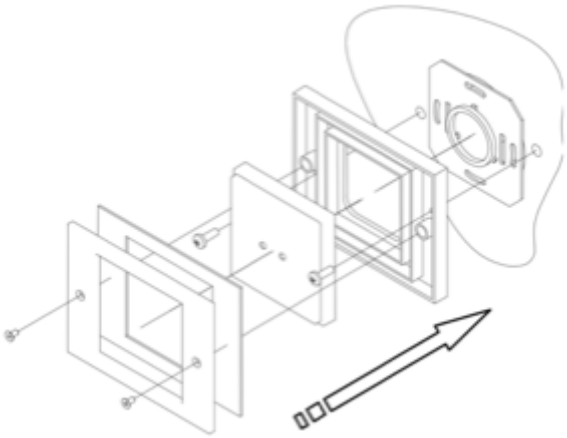

TX-44

S-Color

© Kentix GmbH. This file was automatically generated on 2026-02-04 20:58:11. Please visit docs.kentix.com for the latest documentation.