DoorLock-RA4-RITTAL-VX – MANUAL



ORDER-CODES:
KXC-RA4-RITTAL-VX

DATASHEET KXC-RA4

Overview

The DoorLock-RA4-RITTAL-VX is an adapter for the DoorLock-RA4 locking solution for Rittal IT racks of the VX series. The adapter is only supplied in conjunction with a DoorLock-RA4-IPx-L, as the two components are screwed together at the factory.

Safety instructions

Installation
Installation and commissioning may only be carried out by trained specialist personnel in accordance with the instructions.

© Kentix GmbH. This file was automatically generated on 2026-11-23 01:19:07. Please visit docs.kentix.com for the latest documentation.

No modifications of any kind may be made to Kentix GmbH products, with the exception of those described in the relevant instructions.
When installing Kentix devices, certain degrees of protection must be guaranteed.
Observe the relevant regulations for installations in the respective environment.
Only operate the products within the defined temperature range.
The instructions should be passed on to the user by the person carrying out the installation.
Kentix accepts no liability for damage to the devices or components caused by incorrect installation. Kentix accepts no liability for incorrectly programmed units.
Kentix accepts no liability for faults, material damage or other damage.
Use of the products, transport and storage
Protect the device from
moisture, dirt and damage during transportation, storage and operation.
Battery powered products
Do not use the products in potentially explosive atmospheres.
Only operate the products within the defined temperature range.
Installation and battery replacement may only be carried out by trained specialist personnel in accordance with the instructions.
Do not charge, short-circuit, open or heat batteries.
Observe the correct polarity when inserting the batteries.
The devices must always be operated with the batteries intended for the product.
When changing the batteries, always replace all batteries.
Dispose of old or used batteries properly.
Keep batteries out of the reach of children.
Maintenance
Kentix devices must be checked for functionality as part of annual maintenance.
Disposal
Electrical appliances and batteries must be disposed of separately from household waste.

Dimensions

© Kentix GmbH. This file was automatically generated on 2026-11-23 01:19:07. Please visit docs.kentix.com for the latest documentation.

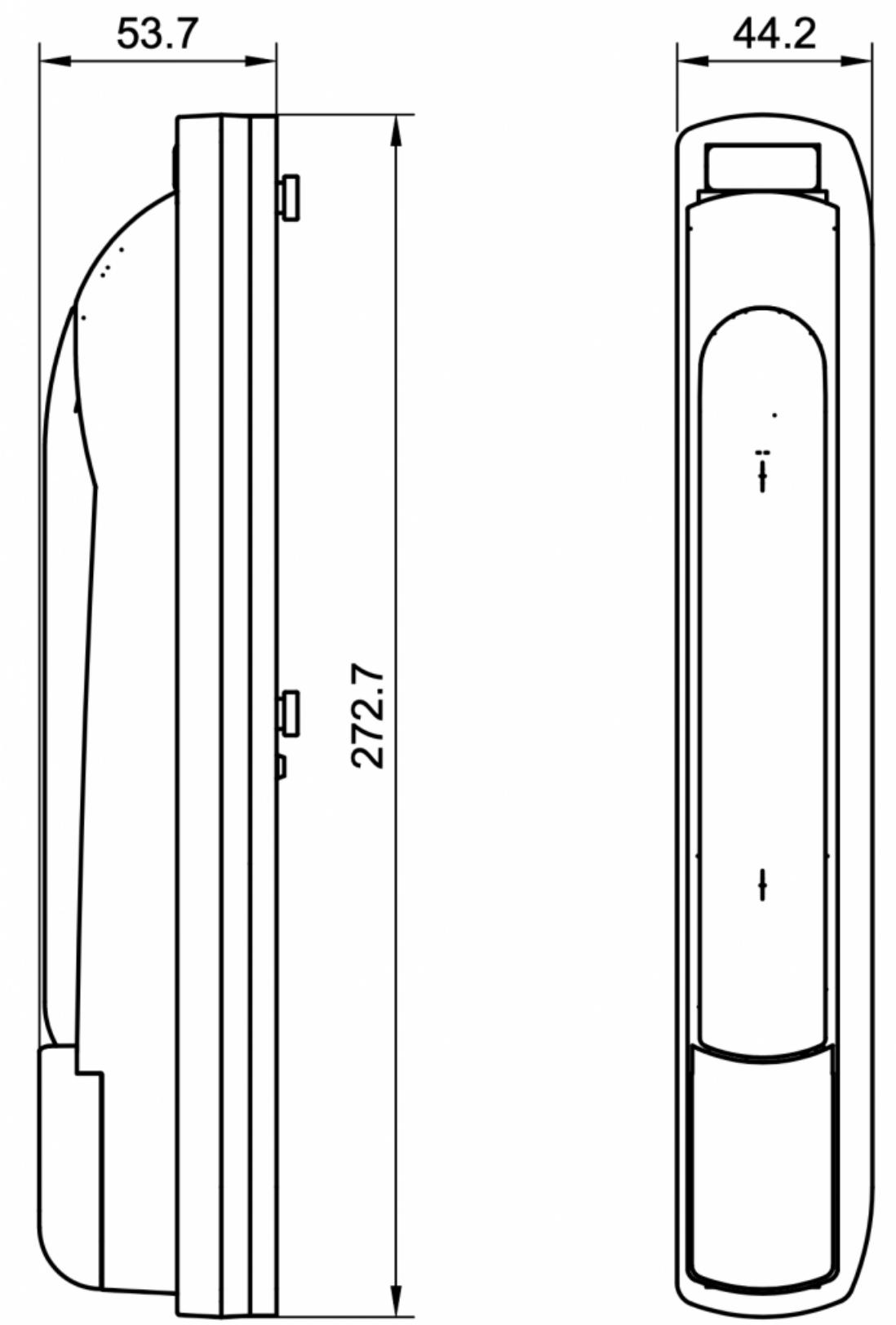

© Kentix GmbH. This file was automatically generated on 2026-11-23 01:19:07. Please visit docs.kentix.com for the latest documentation.

Installation

Adapter KXC-RA4-RITTAL-VX

© Kentix GmbH. This file was automatically generated on 2026-11-23 01:19:07. Please visit docs.kentix.com for the latest documentation.

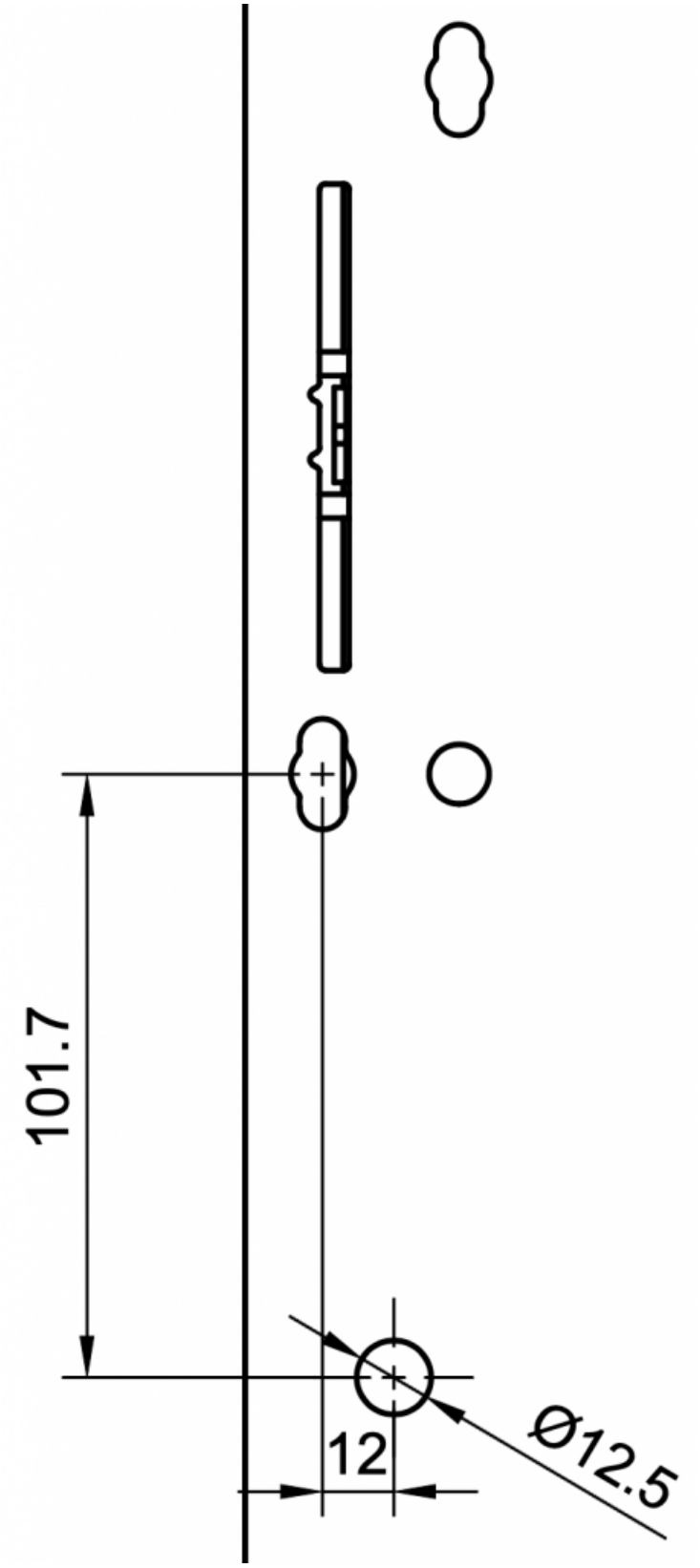

© Kentix GmbH. This file was automatically generated on 2026-11-23 01:19:07. Please visit docs.kentix.com for the latest documentation.

The hole pattern above is required for mounting the DoorLock-RA4 on a door. A hole of at least 12.5 mm must be drilled in the door so that the connection cable can be fed through the door.

The position of the hole can be marked using a drilling template. The template is available on request.

Assembly steps

© Kentix GmbH. This file was automatically generated on 2026-11-23 01:19:07. Please visit docs.kentix.com for the latest documentation.

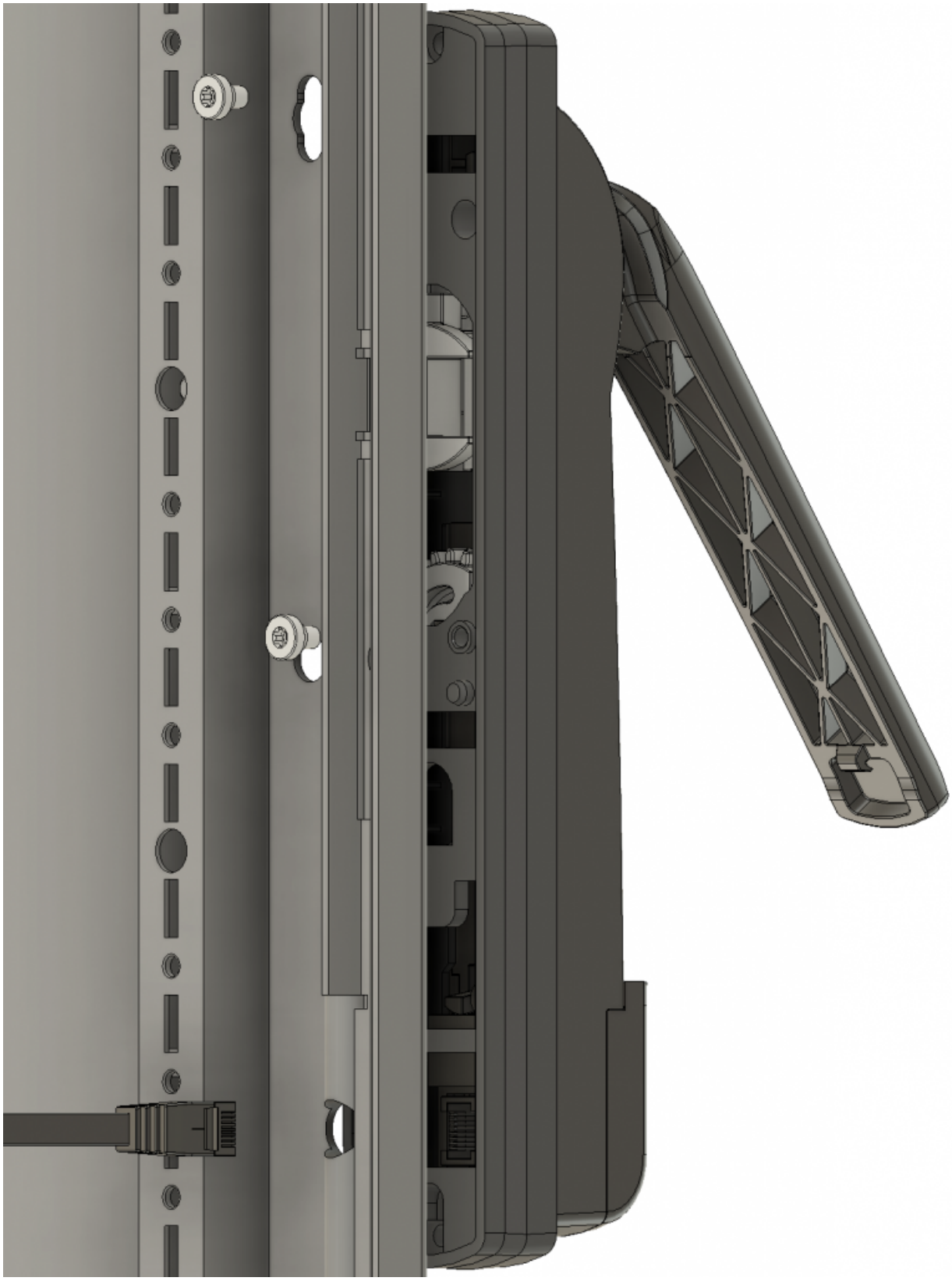

© Kentix GmbH. This file was automatically generated on 2026-11-23 01:19:07. Please visit docs.kentix.com for the latest documentation.

1. Drill hole for cable entry
2. Feed the connection cable through the hole
3. Connecting the cable to the DoorLock
4. Put the DoorLock on the door
5. Tighten the fastening screws with a screwdriver (tightening torque 1.8 Nm)

First connect the DoorLock with the slimline patch cable before attaching it to the rack. Only install the DoorLock when it is open!

For doors with a design bevel, the existing adapter plate from Rittal must be used to compensate for the bevel.

Tools required

1. Metal drill bit with a diameter of at least 12.5 mm
2. TORX® screwdriver with drive size 25

© Kentix GmbH. This file was automatically generated on 2026-11-23 01:19:07. Please visit docs.kentix.com for the latest documentation.